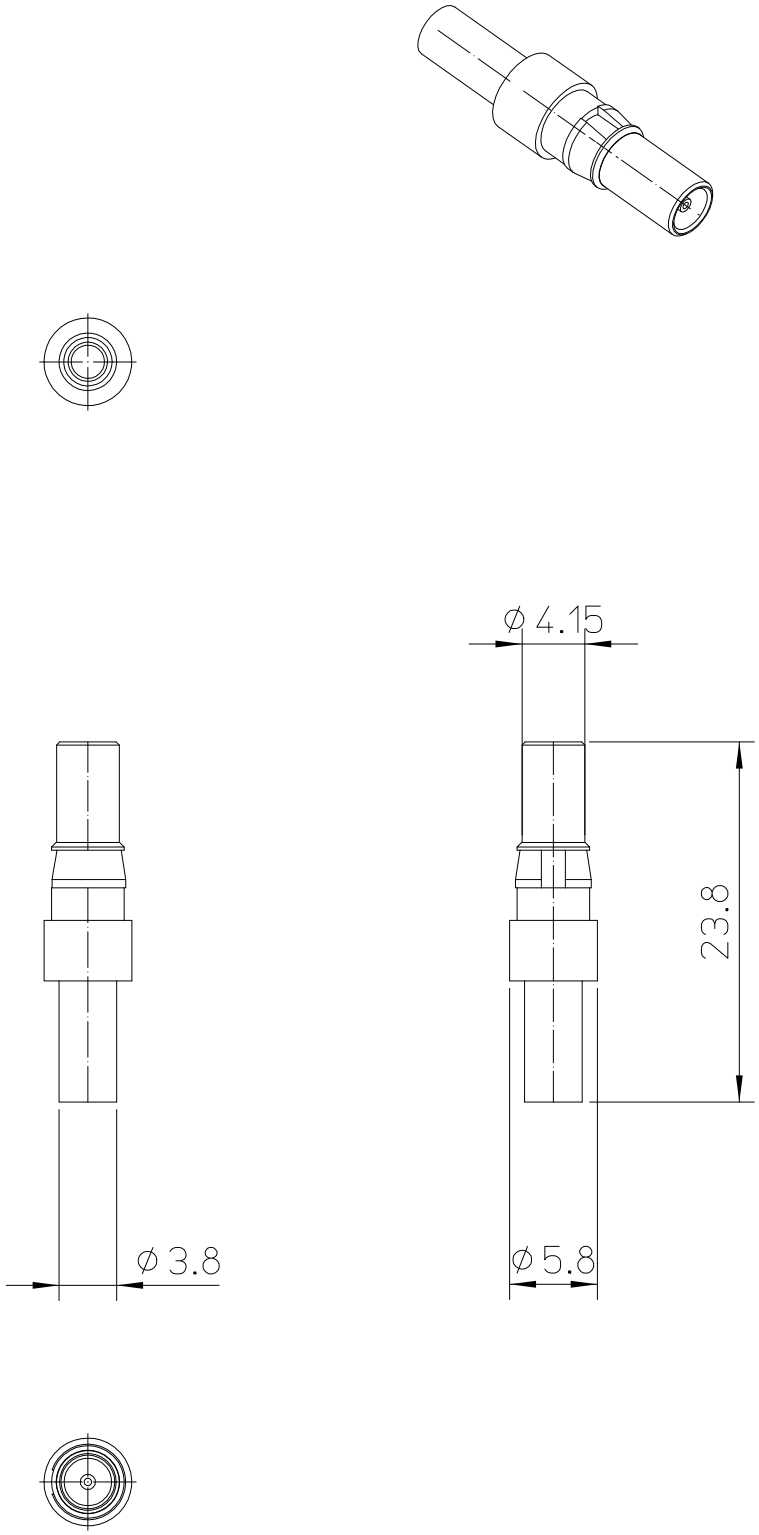

Diritti riservati All rights reserved

dimensions in mm	CX 75 RF	Scale
Date 14/11/16	Coaxial female contact 75 ohm	2:1
Sign. C. Mainini		